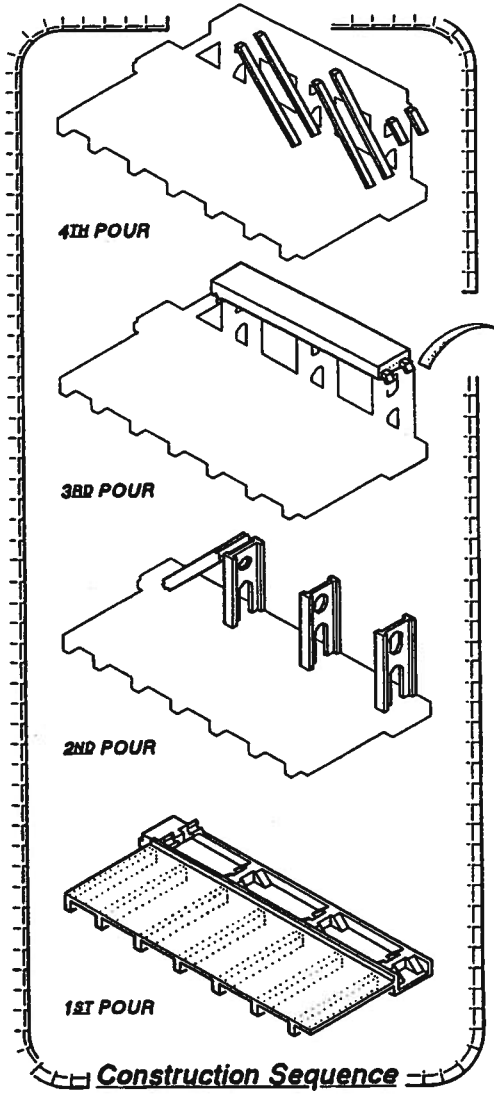

Construction Sequence

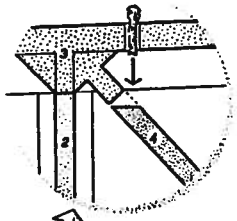

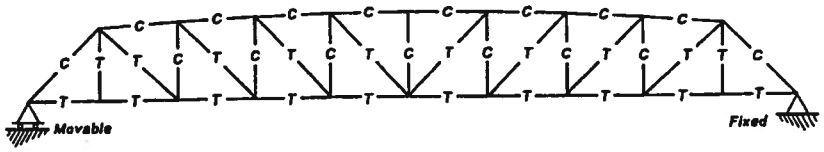

Structural Diagram

No Scale

T = Tension
C = Compression

Through Pratt truss configuration with curved upper chord

The foundation at each end of the bridge has two concrete piers to carry the weight of the "double trusses", and an adjoining diaphragm wall to provide rigidity. The weight of the road deck and live load from traffic is distributed to the inner side of the trusses creating bending stresses.

To avoid eccentric movement at this junction the steel reinforcing of beams at panel points is extended to the outside flange of the lower chord. Additional measures were taken to reinforce the vertical "web panels" of the truss by providing diagonal reinforcing steel over both the octagonal and pedestrian openings.

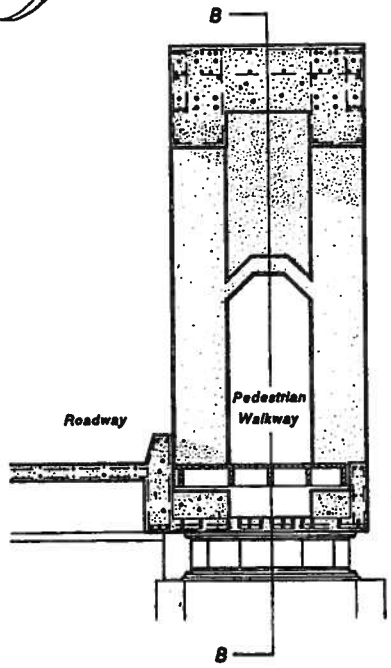

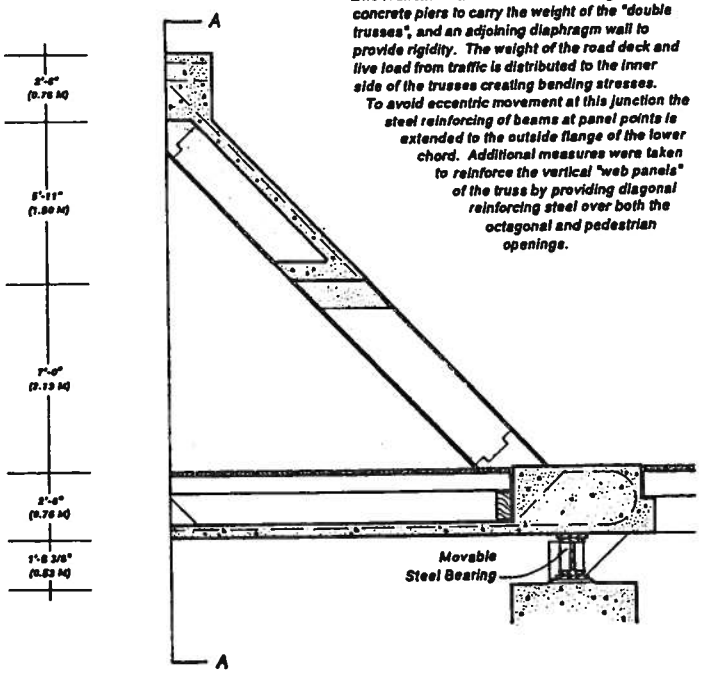

Section 'A' - Transverse at Endpost

0 1 2 3 4 FEET

Scale: 1/2" = 1'-0", 1:24

Section 'B' - Longitudinal at Endpost

0 50 100 200 CENTIMETERS

DELINEATED BY Erin M. Doherty, Summer 1993

WASHINGTON STATE BRIDGES RECORDING PROJECT

MC MILLIN BRIDGE - 1934
STATE ROUTE 162 SPANNING THE PUYALLUP RIVER, 0.8 MILES SOUTH OF MC MILLIN
PIERCE COUNTY WASHINGTON

SHEET 2 - 3

HISTORIC AMERICAN ENGINEERING RECORD WA-73

IF REPRODUCED, PLEASE CREDIT HISTORIC AMERICAN ENGINEERING RECORD, NATIONAL PARK SERVICE, NAME OF DELINEATOR, DATE OF THE DRAWING